IF IN DOUBT ASK!

THIRD ANGLE PROJECTION

DO NOT SCALE DRAWING

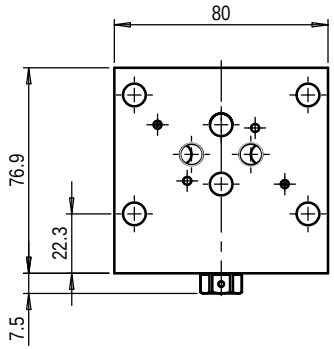

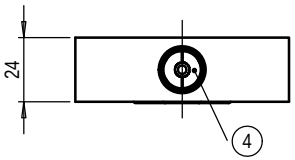

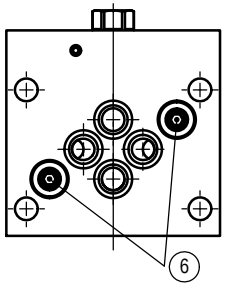

	P	C1	C2	R	X	F1	F2	F3	F4	L
	∅9	∅9	∅9	∅9	∅3	M8	M8	M8	M8	∅3 ↧ 5
x	22.25	11.14	33.35	22.25	33.35	0	44.50	44.50	0	12.35
y	21.39	32.50	32.50	43.61	8.70	0	0	65	65	19.80

TECHNICAL DETAILS

1) MAX. OPERATING PRESSURE 350 BAR

2) MATERIAL STAINLESS STEEL

3) WEIGHT 1.1 KG

(4) SPINDLE VALVE HEXAGON HEAD 14 A/F, ROTATE CLOCKWISE TO CLOSE 1/4 TURN (MAX)

(5) HEX SKT HD (HT) CAP SCREWS ISO 4762 M8 x 75

(6) 1/16 NPT PLUGS, CAN BE REMOVED FOR 5 PORT DESIGN VALVES

7) SUITABLE FOR PETROLEUM BASED MINERAL OILS AND WATER GLYCOLS

DESCRIPTION

This module provides a convinient method of closing the output of a 4-way servo valve. In applications that use multiple servos on a single actuator it is possible to have unwanted offset at the main spool making for an inefficient setup. The module provides the user a way to quickly isolate each of the valves output and therefore allowing accurate nulling of any remaining valves connected to the actuator.

Two indicators provide the user clear identification of the open or closed position. The module may also be rotated through 180° to allow for better access to the hexagon head.

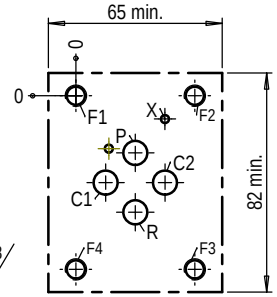

MOUNTING INTERFACES PER ISO 10372-04-04-0-92

GEOM ⏥ 0.01/100 FINISH 0.8

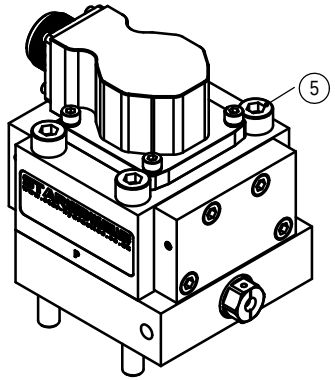

ISO MODEL WITH 550 SERVO VALVE

⚠ WARNING do not remove when pressure exists at manifold

Sheet1

STAR SERVO TECHNOLOGY

STAR HYDRAULICS LTD
Tel: +44 (0)1684 296 176
Fax: +44 (0)1684 850 714
WWW.star-hydraulics.co.uk
sales@star-hydraulics.co.uk

THIS DRAWING IS THE PROPERTY OF STAR HYDRAULICS LTD. AND IT'S ACCEPTANCE FOR THE PURPOSE OF INFORMATION SHALL IMPLY AGREEMENT BY RECIPIENT NOT TO USE IT FOR ANY OTHER PURPOSE AND NOT TO COPY IT, OR PASS IT ON TO A THIRD PARTY

REV	DATE	APPROVER	CHANGE COMMENT

MODEL FILE NAME: SM550-D-001

MODEL CONFIGURATION: Default

MATERIAL: (SPECIFIED IN MODEL) Assembly See BOM Table

FINISH: NATURAL

SEE BS 308 FOR EXPLANATION OF SYMBOLS AND GEOMETRIC TOLERANCES.

UNLESS OTHERWISE SPECIFIED:-
DIMENSIONS ARE IN MILLIMETRES.
THREADS TO BS 3643.
REMOVE ALL BURRS & BREAK SHARP EDGES MAX 0.25 RAD OR CHAMFER.

SURFACE FINISH	1.6 µM Ra	
MACHINING:	±0.25mm	±1.0°
MACHINING BOXED:	[±0.10mm]	[±0.5°]
FABRICATION:	±2.0mm	±2.0°

STATUS: Released

APPROVED BY:

APPROVED DATE: CM

CHECKED BY:

CHECKED DATE: 17 Oct 16

DRAWN BY:

DRAWN DATE:

FILE NAME: SM550-D-001

DESCRIPTION: MODULE (550) CONTROL PORT SHUT OFF

SIZE: ISO A3 420w x 297h

NUMBER: SM550-D-001

REVISION:

SCALE: 1:2

SHEET: 1 OF 1

WEIGHT: 2.05 KG